Simultaneous Lightwave Information and Power Transfer in Visible Light Communication Systems

Shuai Ma, Fan Zhang, Hang Li, *Member, IEEE*, Fuhui Zhou, Yuhao Wang, and Shiyin Li

***Abstract*— In this paper, we investigate a novel simultaneous lightwave information and power transfer (SLIPT) in visible light communication (VLC) systems, where a photo diode (PD) and a solar panel are utilized as the information receiver and the energy harvester, respectively. By systematically analyzing both the information receiver and the energy harvester, we obtain the explicit expressions to characterize the illumination-rate-energy region. Based on the derived expressions, we investigate the downlink unicast transmission of multi-LED multi-user SLIPT VLC networks, and study the total transmit power minimization problem under the rate requirements, the minimum energy harvesting requirements, and dimming control constraints. To solve such non-convex problem, we exploit the semidefinite relaxation (SDR) technique and relax the problem into a convex problem, which can be efficiently solved via interior-point methods. Moreover, for the sake of users' fairness, we further investigate the beamformer design to maximize the minimal rate under both minimum energy harvesting and dimming control constraints. Finally, the numerical results are provided to evaluate the proposed SLIPT system.**

***Index Terms*— Visible light communication, simultaneous lightwave information and power transfer, MISO.**

I. Introduction

AN EXPLOSIVE growing number of wireless devices and the increasing demand for high-speed data services give rise to great pressure on conventional wireless communication networks, including but not limited to radio frequency (RF) spectrum crisis and fast battery depletion. On one hand, to cope with the spectrum crisis, visible light communication (VLC) systems is a promising technique for indoor wireless networks owing to its distinct features: huge license-free spectrum, no electro-magnetic interference, and inherent security [1]–[4]. On the other hand, to alleviate fast battery depletion, energy harvesting becomes an appealing solution to extend the lifetime of wireless networks [5], [6]. Therefore, from the application perspective, the simultaneous lightwave information and power transfer (SLIPT) VLC system, which was first proposed in [7], is attractive since it is able to simultaneously provide illumination, information transfer, and energy harvesting. Specifically, with low cost light emitting diodes (LEDs) at the transmitter side, the information is broadcasted in the form of visible lightwaves under certain illumination requirement and is captured by the photo diode (PD) at the receiver side. Moreover, the receiver may harvest the energy from the lightwave in order to prolong the battery lifetime. Therefore, the SLIPT VLC can work with various indoor Internet of things (IoT) in many scenarios, such as in offices, shopping centers, airports, hospitals, airplane cabins, and etc.

Recently, some works [8]–[11] investigated SLIPT VLC systems by utilizing solar panels to receive information and harvest energy. Specifically, an optical wireless communication system was designed in [8], which provided both the direct current (DC) model and alternating current (AC) model of the solar panel. In [9], the authors derived the rate-energy trade-off for solar panel based receiver architectures. In [10], the VLC system with energy harvesting was investigated under different illumination conditions. In [11], the authors provided a comprehensive overview on SLIPT VLC systems, and established the basic theory of SLIPT receiver architectures in three different domains: time, power, and photoelectric converters. On the other hand, some literatures [7], [12]–[14] used the PD to receive the information and the energy. In [7], a SLIPT strategy was proposed to analyze the tradeoff between the harvested energy and the quality of service (QoS), by exploiting DC bias, field-of-view (FOV), and energy harvesting time. The secrecy outage probability was studied in [12] for hybrid VLC-RF networks. In [13], the rate maximization scheme was investigated for a dual-hop VLC/RF network, where the relay harvests the energy from the VLC link by a PD and then retransmits the data to the RF link. In [14], the sum rate was maximized subject to the minimum rate and energy harvesting constraints for a downlink VLC system.

In summary, the existing works employ either the solar panel [7]–[10] or the PD [12]–[14] to receive both the information and the energy. However, the detection sensitivity of the PD is stronger than that of the solar panel, while the electric power conversion efficiency of the solar panel is higher than the other [8], [15], [16]. Therefore, the PD is

Manuscript received August 8, 2019; accepted August 30, 2019. Date of publication September 11, 2019; date of current version December 10, 2019. The work of S. Ma was supported by "the Fundamental Research Funds for the Central Universities" under Grant 2017QNA32. The associate editor coordinating the review of this article and approving it for publication was L. Dasilva. *(Corresponding author: Shiyin Li.)*

S. Ma, F. Zhang, and S. Li are with the School of Information and Control Engineering, China University of Mining and Technology, Xuzhou 221116, China (e-mail: mashuai001@cumt.edu.cn; zhangfan@cumt.edu.cn; lishiyin@cumt.edu.cn).

H. Li is with the Shenzhen Research Institute of Big Data, Shenzhen 518172, China (e-mail: hangdavidli@163.com).

F. Zhou is with the College of Electronic and Information Engineering, Nanjing University of Aeronautics and Astronautics, Nanjing 211106, China (e-mail: zhoufuhui@ncu.edu.cn).

Y. Wang is with the School of Information Engineering, Nanchang University, Nanchang 330031, China (e-mail: wangyuhao@ncu.edu.cn).

Color versions of one or more of the figures in this article are available online at http://ieeexplore.ieee.org.

Digital Object Identifier 10.1109/TWC.2019.2939242

1536-1276 © 2019 IEEE. Personal use is permitted, but republication/redistribution requires IEEE permission.
See http://www.ieee.org/publications_standards/publications/rights/index.html for more information.

Authorized licensed use limited to: TU Hamburg-Harburg. Downloaded on November 09,2024 at 13:17:55 UTC from IEEE Xplore. Restrictions apply.

more appropriate as an information receiver, and the solar panel is more suitable to harvest the energy. Motivated by this fact, in this paper, we propose a SLIPT VLC system by exploiting the respective advantages of the PD and the solar panel, i.e., PD for the information receiving and solar panel for the energy harvesting.

Besides, although the signal processing in the SLIPT RF communication system has been widely analyzed, its results cannot be directly applied to SLIPT VLC systems since VLC systems have distinct characteristics. Specifically, both peak and average optical power in a VLC system should be limited for eye safety and practical illumination considerations [3], [4]. Moreover, the transmitted signal of a VLC system is non-negative and real due to the intensity modulation and direct detection (IM/DD) technique. It has been shown that the capacity-achieving distribution of VLC channels is discrete over a finite set of points [17], [18], while the true capacity is not in a closed-form expression. Thus, the classic Shannon capacity of RF with Gaussian input distribution cannot accurately evaluate the throughput performance of VLC systems. As such, the above-mentioned existing works [7], [9], [13] adopted certain lower bounds of VLC channel capacity as the metric for the information rate. However, these lower bounds were derived by only accounting for the average optical power constraint, or purely under the peak optical power constraint [14]. In this work, we adopt the ABG lower bound [19] (which is characterized by three key parameter) as the achievable rate expression of VLC networks, which is derived based on peak optical power, average optical power and electrical power constraints.

In this paper, we investigate the SLIPT VLC system with the PD and the solar panel as the information receiver and the energy harvester, respectively. To the best of our knowledge, no existing research work has studied such SLIPT VLC system.

The main contributions of this paper are summarized as follows:

- We analyze the signal flows of the SLIPT VLC system to describe the three main performance metrics: illumination, information transfer, and energy harvesting. The signal processing module is investigated at the transmitter. Next, we evaluate the average illumination level based on the dimming control. The ABG lower bound of the channel capacity is considered as the achievable information rate. Also, we reveal the relationship between the power amplifier (PA) of the transmitter and the output voltage and current of the solar panel to quantify the harvested energy. Based on such analysis, we obtain the illumination-rate-energy region of the proposed SLIPT VLC system.
- Furthermore, we investigate the downlink unicast transmission of multi-LED multi-user SLIPT VLC networks. First, we derive the relationship among illumination, information transfer and energy harvesting of the multi-LED multi-user SLIPT VLC networks with explicit expressions. Then, we study the total transmission power minimization problem constrained by the illumination-rate-energy region. To solve this non-convex problem, we exploit the semidefinite relaxation (SDR) technique and relax the problem into a convex problem, which can be efficiently solved via interior-point methods.
- Moreover, we investigate the beamforming design to maximize the minimal rate and satisfy both the minimum energy harvesting requirements and dimming control constraints. Due to the non-convexity of this formulated problem, it cannot be solved directly. In order to circumvent this issue, we exploit the SDR and the bisection search. Particularly, the formulated problem can be relaxed into a sequence of convex semidefinite programs (SDPs).

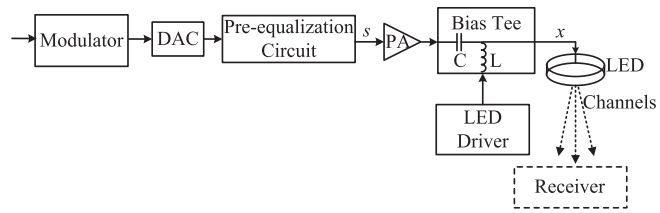

Fig. 1. Schematic diagram of the SLIPT VLC system.

The rest of this paper is organized as follows. In Section II, the point-to-point SLIPT VLC system is given and analyzed. In Section III, we present the point-to-multi-point SLIPT VLC system. In Section IV, we discuss the SLIPT-VLC system design problems. In Section V, the simulation results are provided. Finally, conclusions are made in Section VI.

Notations: Boldfaced lowercase and uppercase letters represent vectors and matrices respectively. The transpose. and Frobenius norm, and trace of a matrix are denoted as $(\cdot)^{\mathrm{T}}$, $\|\cdot\|$, and $\mathrm{Tr}\,(\cdot)$ respectively. $\mathbf{A} \odot \mathbf{B}$, and $\mathbf{A} \otimes \mathbf{B}$ respectively denote Hadamard product and Kronecker product of $\mathbf{A}$ and $\mathbf{B}$. $\mathcal{K} \triangleq \{1, 2, ..., K\}$ and $\mathcal{N} \triangleq \{1, 2, ..., N\}$.

II. Point-to-Point SLIPT VLC System

In this section, we investigate a point-to-point SLIPT VLC system with a LED at the transmission side as shown in Fig. 1. At the transmitter, the information is first modulated to the digital signal by the modulator. Then, the digital signal is transformed to the analog form by the digital-to-analog converter (DAC), and amplified via the PA. After PA, the signal passes through the Bias Tee, and is added with a DC from the LED driver. Finally, the LED changes the signals to the visible light, and sends out to the receiver.

A. Generating Signals at the Transmitter

As illustrated in Fig. 1, let s denote the continuous data symbol which is a random real number with $\mathbb{E}\{s\} = 0$. Moreover, given some $A > 0$ and $\varepsilon > 0$, its peak amplitude and variance can be respectively given as $-A \leq s \leq A$ and $\mathbb{E}\left\{s^2\right\} = \varepsilon$. After PA, the transmitted signal at the LED is given as

$$x = \sqrt{g}s + I_{\mathrm{D}}, \tag{1}$$

Authorized licensed use limited to: TU Hamburg-Harburg. Downloaded on November 09,2024 at 13:17:55 UTC from IEEE Xplore. Restrictions apply.

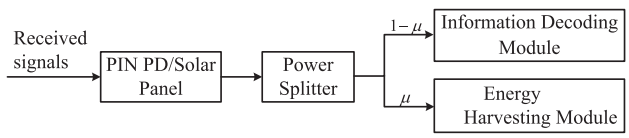

Fig. 2. Existing architecture of the SLIPT VLC receiver.

where g denotes the power gain of the PA, and I_{D} denotes the DC offset.

Since the transmitted signal x should be non-negative, i.e., $\sqrt{g}s + I_{\mathrm{D}} \geq 0$, g satisfies

$$0 \leq g \leq \frac{I_{\mathrm{D}}^2}{A^2}. \tag{2}$$

The average electrical power of the transmitted signal x is given by

$$P_{\mathrm{e}}^{\mathrm{MISO}} = \mathbb{E}\left\{\|\sqrt{g}s\|^2 + I_{\mathrm{D}}^2\right\} = g\varepsilon + I_{\mathrm{D}}^2. \tag{3}$$

In addition, the luminous flux of the LED Φ_{OT} is given by [20]

$$\Phi_{\mathrm{OT}} = 354.286x + 27. \tag{4}$$

We will use Φ_{OT} to derive the amount of harvested energy at the receiver side.

B. Dimming Control

As one of the basic demands in VLC systems, dimming control is to adjust the average optical power to satisfy practical illumination requirements [21], [22]. Let τ denote the dimming level, and $P_{\mathrm{o}}^{\mathrm{ave}}$ denote the average optical power. The relationship between dimming level τ and the average optical power $P_{\mathrm{o}}^{\mathrm{ave}}$ is given by

$$\tau = \frac{P_o^{ave}}{P_T} \tag{5}$$

where P_T is the maximum optical power, and thus $0 < \tau \leq 1$. Furthermore, according to (1), the average optical power $P_{\mathrm{o}}^{\mathrm{ave}}$ is determined by the DC offset I_{D}, i.e.,

$$P_{\mathrm{o}}^{\mathrm{ave}} = \mathbb{E}\{x\} = I_{\mathrm{D}}. \tag{6}$$

Thus, the control of dimming level can be realized by adjusting I_{D}, i.e., $\tau = \frac{I_D}{P_T}$.

Moreover, for eye safety and the maximum permissible current of LEDs considerations [22]–[24], let I_{H} denote the maximum permissible current of the LED, i.e., $\sqrt{g}A + I_{\mathrm{D}} \leq I_{\mathrm{H}}$. Thus, g should satisfy

$$g \leq \frac{(I_{\mathrm{H}} - I_{\mathrm{D}})^2}{A^2}. \tag{7}$$

Therefore, the transmitter may control the transmission power g to meet the illumination and safety requirements. Note that the signals sent out by the LED are in the form of lightwaves, and are evenly distributed in the space.

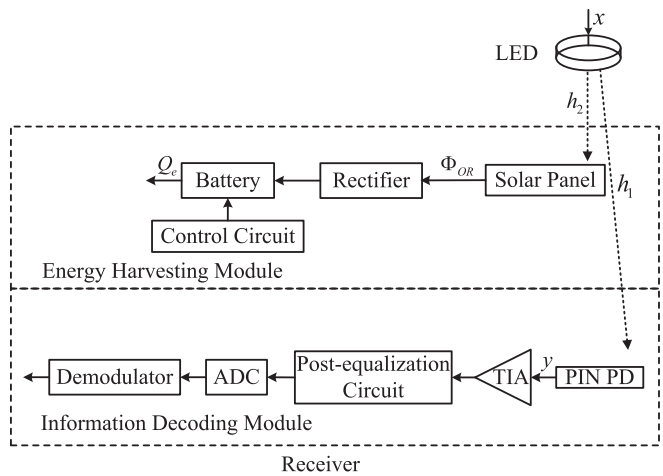

Fig. 3. Structure combining information receiving and energy harvesting.

C. Receiver Structure

The lightwaves travel through the optical channels and land at the receiver side, where the PD or solar panel may capture them. In most existing works, as shown in Fig. 2, the receiver uses either PD or solar panel to receive the signals, and adopts power splitting technique to obtain separated signals, where one portion is for information decoding and the other portion is for energy harvesting.

However, as we discussed above, the PD and solar panel have expertise in different tasks, and thus in this paper, we use a combined structure such that one PD is for information receiving and one solar panel is for energy harvesting, as shown in Fig. 3. In the following, we will analyze quantitatively for each module in detail.

1) Information Decoding Module: The optical channel between LED and the PD is dominated by the direct line-of-sight (LOS) link, while the gain of reflection links can be negligible [25]–[27]. Let h_1 denote the LOS link gain between the LED and PD, which is given by [28]

$$h_1 = \begin{cases} \dfrac{(m_1+1)\,A_{\mathrm{PD}}}{2\pi d_1^2}\cos^{m_1}(\phi_1)\cos(\varphi_1) & 0 \leq \varphi_1 \leq \Psi_1; \\ 0, & \text{otherwise}, \end{cases} \tag{8}$$

where $m_1 = \frac{-\log 2}{\log\left(\cos\left(\phi_{1/2}\right)\right)}$ denotes the Lambert index; $\phi_{1/2}$ is the semi-angle at half power; d_1 denotes the distance from the LED to the PD; A_p represents the PD's detector area; ϕ_1 and φ_1 denote the irradiance angle and the incidence angle, respectively; and Ψ_1 denotes the half of PD's FOV.

At the information decoding module, the PD converts the LED-emitted light to the analog signal, and then the analog-to-digital converter (ADC) samples the analog signal to the digital form. Assume that the LED nonlinearity is mitigated by using pre-distortion and post-distortion techniques. Generally, the received signal y can be expressed as

$$y = h_1 x + z, \tag{9}$$

Authorized licensed use limited to: TU Hamburg-Harburg. Downloaded on November 09,2024 at 13:17:55 UTC from IEEE Xplore. Restrictions apply.

where z represents zero-mean Gaussian noise with a variance σ^2, which accounts for both the shot noise and the thermal noise.

Recall in Section I that the channel capacity of VLC channels is unknown. Here, we adopt the achievable rate expression: ABG lower bound in [19] to analyze the SLIPT VLC system. Specifically, the achievable rate denoted by R_{SISO} such that

$$R_{\text{SISO}} \geq \frac{1}{2}\log_2\left(1+\frac{h_1^2 g e^{1+2(\alpha+\gamma\varepsilon)}}{2\pi\sigma^2}\right), \tag{10}$$

where α and γ are the parameters determined by A and ε. The above lower bound of R_{SISO} can be achieved by the distribution [19]

$$f_S(s) = \begin{cases} e^{-1-\alpha-\beta s-\gamma s^2}, & -A \leq s \leq A; \\ 0, & \text{otherwise}, \end{cases} \tag{11}$$

where α, β and γ are the solutions of the following equations

$$T(A) - T(-A) = e^{1+\alpha}, \tag{12a}$$

$$\beta\left(e^{A(\beta-\gamma A)} - e^{-A(\beta+\gamma A)} - e^{1+\alpha}\right) = 0, \tag{12b}$$

$$e^{A(\beta-\gamma A)}\left((\beta-2\gamma A)e^{-2A\beta} - \beta - 2\gamma A\right) + \left(\beta^2+2\gamma\right)e^{1+\alpha} = 4\gamma^2\varepsilon e^{1+\alpha}, \tag{12c}$$

where $T(s) \triangleq \sqrt{\pi}\frac{e^{\frac{\beta^2}{4\gamma}}\operatorname{erf}\left(\frac{\beta+2\gamma s}{2\sqrt{\gamma}}\right)}{2\sqrt{\gamma}}$. For convenience, we use $R^{\text{L}}_{\text{SISO}}$ to denote the lower bound of R_{SISO} in (10).

2) Energy Harvesting Module: At the energy harvester, both the LED-emitted light and the ambient light are transformed to an analog electrical signal by the solar panel, filtered by the rectifier, and finally stored in the battery. Analogously, let h_2 denote the channel gain between the LED and the solar panel[1], which is given by

$$h_2 = \begin{cases} \frac{(m_1+1)A_s}{2\pi d_2^2}\cos^{m_2}(\phi_2)\cos(\varphi_2) & 0 \leq \varphi_2 \leq \Psi_2; \\ 0, & \text{otherwise}, \end{cases} \tag{13}$$

where d_2 denotes the distance from the LED to the solar panel; A_s represents the solar panel's detector area; ϕ_2 and φ_2 denote the irradiance angle and the incidence angle, respectively; and Ψ_2 denotes the half of solar panel's FOV.

The received luminous flux Φ_{OR} is given by [29]

$$\Phi_{\text{OR}} = h_2\Phi_{\text{OT}}. \tag{14}$$

Since the background light and LED light are usually incoherent, the received illuminance at the solar panel is given by

$$E = \frac{\int_{380}^{780}\hat{S}(\lambda)\,d\lambda}{\vartheta\int_{380}^{780}\hat{S}(\lambda)V(\lambda)\,d\lambda}\frac{\Phi_{\text{OR}}}{A_s} + E_{\text{a}}, \tag{15}$$

where $\widehat{S}(\lambda)$ is the relative spectral energy density of the LED [20], $\vartheta = 683$lm/w, and $V(\lambda) \approx 1.019e^{-285.4\left(\lambda\times10^6-0.559\right)^2}$ is the standard luminosity function [30], [31]; E_{a} represents the intensity of the ambient light $\left(\text{W/m}^2\right)$.

[1]The correlation between h_1 and h_2 is not considered in this paper.

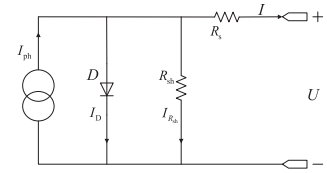

Fig. 4. The basic equivalent circuit of a solar panel.

The basic equivalent circuit of a solar panel is shown in Fig. 4. Since the solar panel usually has certain non-linear current-voltage characteristics, maximum power point (MPP) tracking techniques are often applied to analyze the delivered power. There are several MPP tracking methods [32]–[35], and we adopt the fractional open-circuit voltage (FOCV) method [34], [35], which is widely used in small-scale solar panel systems. With the FOCV method, the output voltage U and the open-circuit voltage U_{oc} can be approximated as [35]

$$U = \eta U_{\text{oc}}, \tag{16}$$

where $\eta \in [0.71, 0.78]$ is a factor. At the MPP, the output current I of the solar panel is given by [10], [36], [37],

$$I = I_{\text{ph}} - I_{\text{s0}}\left(e^{c_1(U+IR_{\text{s}})} - 1\right) - \frac{U+IR_{\text{s}}}{R_{\text{sh}}}, \tag{17}$$

where I_{ph} is the light-generated current; I_{s0} is the dark saturation current; c_1 is the panel factor. Here, we have $c_1 = \frac{q_{\text{e}}}{kJ_{\text{f}}T_{\text{a}}}$, where q_{e} is the electron charge, k is the Boltzmann's constant, J_{f} is the ideality factor of the diode and T_{a} is the ambient temperature. Besides, in (17), R_{sh} is the equivalent parallel resistance, and R_{s} is the equivalent series resistance.

In the indoor conditions, the values of the output current I and the series resistors R_{s} are generally at milliampere (mA) and milliohm (mΩ) levels, respectively [10], [38], [39]. Moreover, the value of the output voltage U is no more than 10 volt (V), while the the value of the shunt resistor R_{sh} is no less than 1 kilo-ohm (kΩ) [10], [38], [39]. Therefore, both the terms IR_{s} and $\frac{U+IR_{\text{s}}}{R_{\text{sh}}}$ in (17) can be neglected, and the output current I can be approximated as

$$I = I_{\text{ph}} - I_{\text{s0}}\left(e^{c_1 U} - 1\right). \tag{18}$$

When the circuit is open, i.e., $I = 0$, we have

$$I_{\text{s0}} = \frac{I_{\text{ph}}}{e^{c_1 U_{\text{oc}}} - 1}, \tag{19a}$$

$$U_{oc} = \frac{1}{c_1}\ln\left(\frac{I_{\text{ph}}}{I_{\text{s0}}} + 1\right). \tag{19b}$$

Furthermore, the light-generated current I_{ph} is positively proportional to the irradiance light E and the ambient temperature T_{a} [35], [40], which is given by

$$I_{\text{ph}} = \frac{E}{E_{\text{stc}}}\left(I_{\text{sc,stc}} + \alpha_{\text{stc}}\left(T_{\text{a}} - T_{\text{a,stc}}\right)\right), \tag{20}$$

where $I_{\text{sc,stc}}$ is short-circuit current in the Standard Test Conditions (STC), i.e., the irradiance is $E_{\text{stc}} = 1000\text{W/m}^2$; the ambient temperature $T_{\text{a,stc}}$ is $298K$; and α_{stc} is temperature coefficient for short circuit current.

Authorized licensed use limited to: TU Hamburg-Harburg. Downloaded on November 09,2024 at 13:17:55 UTC from IEEE Xplore. Restrictions apply.

Then, substituting (20) into (19b), the open circuit voltage U_{oc} is given by

$$U_{oc} = \frac{1}{c_1} \ln\left(\widehat{\lambda} E + 1\right), \tag{21}$$

where $\widehat{\lambda} = \frac{I_{\text{sc,stc}} + \alpha_{\text{sc}}(T_{\text{a}} - T_{\text{a,stc}})}{E_{\text{stc}} I_{\text{s0}}}$.

The dark saturation current in (17) depends on the temperature T_{a} [35], [40], which is given by

$$I_{s0} = \frac{I_{\text{s0,stc}} T_{\text{a}}^3}{T_{\text{a,stc}}^3} \exp\left(\frac{E_{\text{g,stc}}\left(1 - \varsigma\left(T_{\text{a}} - T_{\text{a,stc}}\right)\right)}{kT_{\text{a}}} - \frac{E_{\text{g,stc}}}{kT_{\text{a,stc}}}\right), \tag{22}$$

where $I_{\text{s0,stc}}$ is the dark saturation current in the STC, $\varsigma = 0.0002677$, and $E_{\text{g,stc}} = 1.12\text{eV}$.

When the output circuit is shorted, i.e., $U = 0$, we have

$$I_{\text{ph}} = I_{\text{sc}}. \tag{23}$$

Then, according to (18), $I_{\text{sc,stc}}$ is given by

$$I_{\text{s0,stc}} = \frac{I_{\text{sc,stc}}}{e^{c_1 U_{\text{oc,stc}}} - 1}, \tag{24}$$

where $U_{\text{oc,stc}}$ is open-circuit voltage in the STC.

Finally, we obtain the output power of the solar panel as a function of power gain g of PA, which is given by

$$\begin{aligned} P_{\text{solar}} &= \mathbb{E}\left\{IU\right\} && \text{(25a)}\\ &= \mathbb{E}\left\{\frac{\eta I_{\text{ph}}\left(e^{c_1 U_{\text{oc}}} - e^{c_1 U}\right)}{c_1\left(e^{c_1 U_{\text{oc}}} - 1\right)} \ln\left(\widehat{\lambda} E + 1\right)\right\} && \text{(25b)}\\ &\approx \Gamma \mathbb{E}\left\{E^2\right\} + \Gamma\left(\ln\widehat{\lambda} - 1\right)\mathbb{E}\left\{E\right\} && \text{(25c)}\\ &= \Upsilon h_2^2 g\varepsilon + w, && \text{(25d)} \end{aligned}$$

where $\Gamma \triangleq \frac{\eta(I_{\text{sc,stc}} + \alpha_{\text{sc}}(T_{\text{a}} - T_{\text{a,stc}}))}{c_1 E_{\text{stc}}}$; the approximation (25c) holds due to $E \gg -\frac{(\widehat{\lambda}E+1)^{\eta}}{\widehat{\lambda}} + \frac{1}{\widehat{\lambda}}$, and the first-order Taylor expansions: $\ln(1+x) \approx x$; $\Upsilon \triangleq \Gamma\left(\frac{354.286v}{A_s}\right)^2$, $w \triangleq \Gamma\left(\frac{354.286vh_2 I_{\text{D}} + 27vh_2}{A_s} + E_{\text{a}}\right)^2 + \Gamma\left(\ln\widehat{\lambda} - 1\right)\left(\frac{354.286vh_2 I_{\text{D}} + 27vh_2}{A_s} + E_{\text{a}}\right)$, and $v = \frac{\int_{380}^{780} \hat{S}(\lambda) d\lambda}{\vartheta \int_{380}^{780} \hat{S}(\lambda) V(\lambda) d\lambda}$.

Thus, we obtain the energy collected by the solar panel during the time Δt, which can be written as

$$Q_{\text{solar}}\left(\Delta t\right) = P_{\text{solar}} \Delta t. \tag{26}$$

D. Illumination-Rate-Energy Region

So far, we have obtained the explicit expressions for both the rate and the harvested energy as functions of the power gain g, which are given in (10) and (25), respectively. Note that, under the practical electrical circuits considerations, the electrical power of VLC signal is also constrained. Thus, the power gain g and I_{D} need to satisfy

$$g\varepsilon + I_{\text{D}}^2 \leq \overline{P}. \tag{27}$$

where $\overline{P}$ is the total electrical transmitted power.

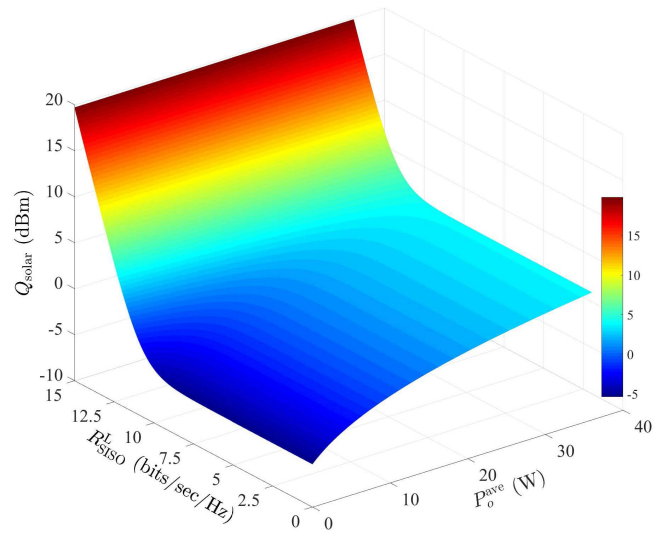

Fig. 5. Illumination-rate-energy region of SLIPT VLC networks.

Combining (2), (7) and (27), we have

$$0 \leq g \leq \min\left\{\frac{I_{\text{D}}^2}{A^2}, \frac{\left(I_{\text{H}} - I_{\text{D}}\right)^2}{A^2}, \frac{\overline{P} - I_{\text{D}}^2}{\varepsilon}\right\}. \tag{28}$$

Finally, we introduce an illumination-information-energy (I-R-E) region that consists of illumination level, achievable rate, and energy harvesting power under a given set of transmit power constraints, which can be written as

$$C_{\text{I-R - E}} = \left\{\begin{array}{c} \left(P_{\text{o}}^{\text{ave}}, R_{\text{SISO}}, Q_{\text{solar}}\right): \\ P_{\text{o}}^{\text{ave}} = I_{\text{D}} = \tau P_T, \\ R^{\text{L}}_{\text{SISO}} = \frac{1}{2}\log_2\left(1 + \frac{h_1^2 g e^{1+2(\alpha+\gamma\varepsilon)}}{2\pi\sigma^2}\right), \\ Q_{\text{solar}}\left(\Delta t\right) \leq IU\Delta t, \end{array}\right\} \tag{29}$$

where $0 \leq g \leq \min\left\{\frac{I_{\text{D}}^2}{A^2}, \frac{(I_{\text{H}} - I_{\text{D}})^2}{A^2}, \frac{\overline{P_{\text{e}}} - I_{\text{D}}^2}{\varepsilon}\right\}$.

Note that I-R-E region (29) characterizes the impact among illumination level, achievable rate, and energy harvesting power. Their relationship is shown in Fig (5) under a typical setup. We can observe that for a given illumination level P_o^{ave}, as the achievable rate $R^{\text{L}}_{\text{SISO}}$ increases, the harvesting power Q_{solar} first increases slowly, and then increases rapidly. This because $Q_{\text{solar}} = \left(\Upsilon h_2^2 \frac{\left(2^{2R^{\text{L}}_{\text{SISO}}} - 1\right) 2\pi\sigma^2}{h_1^2 e^{1+2(\alpha+\gamma\varepsilon)}} \varepsilon + w\right) \Delta t$, where w is a constant. For a given achievable rate $R^{\text{L}}_{\text{SISO}}$, the harvesting power Q_{solar} monotonously rises with the increase of illumination level P_o^{ave}. This is because that $Q_{\text{solar}} = \left(\Upsilon h_2^2 g\varepsilon + w\right)\Delta t$, where $w = \Gamma\left(\frac{354.286vh_2 P_o^{ave} + 27vh_2}{A_s} + E_{\text{a}}\right)^2 + \Gamma\left(\ln\widehat{\lambda} - 1\right)\left(\frac{354.286vh_2 P_o^{ave} + 27vh_2}{A_s} + E_{\text{a}}\right)$.

In Section V, we will numerically depict the harvested energy Q_{solar} and the achievable lower bound $R^{\text{L}}_{\text{SISO}}$ versus the DC I_{D} and power gain of the PA g.

III. MULTI-LED MULTI-USER SLIPT VLC NETWORKS

For both indoor and outdoor scenarios, multi-LED and multi-user are common for VLC networks, where multi-LED

Authorized licensed use limited to: TU Hamburg-Harburg. Downloaded on November 09,2024 at 13:17:55 UTC from IEEE Xplore. Restrictions apply.

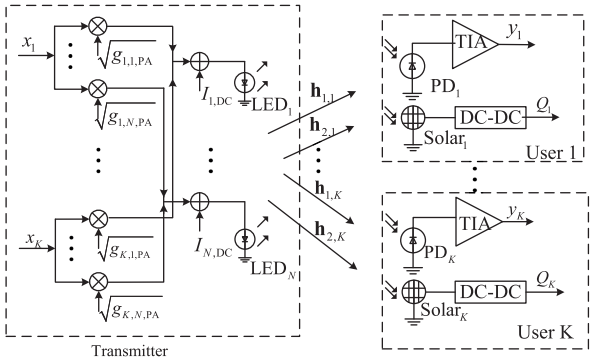

Fig. 6. Schematic diagram of the multi-user multi-LED SLIPT VLC networks.

can provide more brighter illuminations. Thus, the multi-LED and multi-user SLIPT VLC network is worth investigating. In this section, we further investigate a downlink unicast transmission of multi-LED multi-user SLIPT VLC network. Specifically, the transmitter with N LEDs simultaneously transmits both data and energy to K users, as shown in Fig. 6. Let s_k denote the message for user k, where $|s_k| \leq A_k$, $\mathbb{E}\{s_k\} = 0$, and $\mathbb{E}\{s_k^2\} = \varepsilon_k$. Let $\mathbf{g}_k = \left[\sqrt{g_{k,1}}, ..., \sqrt{g_{k,N}}\right]^T \in \mathbb{R}^N$ denote the beamforming vector for signal s_k. The total transmitted signal $\mathbf{x}$ is given by

$$\mathbf{x} = \sum_{k=1}^{K} \mathbf{g}_k s_k + I_{\mathrm{D}} \mathbf{1}_N, \tag{30}$$

where $\mathbf{g}_k$ is the beamforming vector for s_k, and $\mathbf{1}_N$ is a $N \times 1$ vector with all elements equal to 1.

The average electrical power of the transmitted signal $\mathbf{x}$ is given by

$$P_e^{\mathrm{MISO}} = \mathbb{E}\left\{\sum_{k=1}^{K} \|\mathbf{g}_k s_k\|^2 + N I_{\mathrm{D}}^2\right\} = \sum_{k=1}^{K} \varepsilon_k \|\mathbf{g}_k\|^2 + N I_{\mathrm{D}}^2. \tag{31}$$

To guarantee the non-negativity of the transmitted signal, the beamforming vector $\mathbf{g}_k$ satisfies

$$\sum_{k=1}^{K} A_k \mathbf{g}_k^T \mathbf{e}_n \leq I_{\mathrm{D}}, \quad \forall n \in \mathcal{N}. \tag{32}$$

Moreover, the luminous flux of the n-th LED is given by

$$\Phi_{n,\mathrm{OT}} = 354.286 \left(\sum_{k=1}^{K} \sqrt{g_{k,n}} s_k + I_{\mathrm{D}}\right) + 27. \tag{33}$$

A. Dimming Control

We assume that the LED nonlinearity is mitigated by using pre-distortion and post-distortion techniques. For eye safety and the maximum permissible current of LEDs considerations, $\{\mathbf{g}_k\}$ should satisfy

$$\sum_{k=1}^{K} A_k \mathbf{g}_k^T \mathbf{e}_n + I_{\mathrm{D}} \leq I_{\mathrm{H}}. \tag{34}$$

The average optical power of the multi-LED SLIPT VLC is

$$P_{\mathrm{o}}^{\mathrm{MISO}} = \mathbb{E}\left(\sum_{k=1}^{K} \mathbf{g}_k s_k + I_{\mathrm{D}} \mathbf{1}_N\right) = N I_{\mathrm{D}}. \tag{35}$$

Then, the relationship between dimming control and optical power can be given by

$$\tau = \frac{P_{\mathrm{o}}^{\mathrm{MISO}}}{P_T}. \tag{36}$$

B. Information Receiver

Let $h_{1,k,n}$ denote the channel gain from the nth LED to the PD of the kth user, which is similar to (8). Moreover, let $\mathbf{h}_{1,k} = [h_{1,k,1}, \ldots, h_{1,k,N}]^T$ denote the channel vector between the LED light and user k. Then, at user k, the received signal $y_{1,k}$ is given by

$$y_{1,k} = \mathbf{h}_{1,k}^T \sum_{i=1}^{K} (\mathbf{g}_i s_i + I_{\mathrm{D}} \mathbf{1}_N) + z_k, \quad \forall k \in \mathcal{K}, \tag{37}$$

where z_k is the additive Gaussian noise with zero mean and variance σ^2.

According to [19], the achievable rate of user k is bounded by

$$R_k^{\mathrm{MISO}} \geq \frac{1}{2} \log_2 \frac{2\pi\sigma^2 + \sum_{i=1}^{K} \left|\mathbf{h}_{1,k}^T \mathbf{g}_i\right|^2 e^{1+2(\alpha_i + \gamma_i \varepsilon_i)}}{2\pi\sigma^2 + 2\pi \sum_{l=1, l\neq k}^{K} \left|\mathbf{h}_{1,k}^T \mathbf{g}_l\right|^2 \varepsilon_l}, \tag{38}$$

where α_i and γ_i are the parameters determined by A_i and ε_i. The lower bound of (38) can be achieved by the distribution [19]

$$f_{S_i}(s_i) = \begin{cases} e^{-1-\alpha_i - \beta_i s_i - \gamma s_i^2}, & -A_i \leq x \leq A_i; \\ 0, & \text{otherwise}, \end{cases} \tag{39}$$

where α_i, β_i and γ_i are the solutions of the following equations

$$T(A_i) - T(-A_i) = e^{1+\alpha_i}, \tag{40a}$$

$$\beta_i \left(e^{A_i(\beta_i - \gamma_i A_i)} - e^{-A_i(\beta_i + \gamma_i A_i)} - e^{1+\alpha_i}\right) = 0, \tag{40b}$$

$$e^{A_i(\beta_i - \gamma_i A_i)} \left((\beta_i - 2\gamma A_i) e^{-2A_i\beta_i} - \beta_i - 2\gamma_i A_i\right) + \left(\beta_i^2 + 2\gamma_i\right) e^{1+\alpha_i} = 4\gamma_i^2 \varepsilon_i e^{1+\alpha_i}. \tag{40c}$$

C. Energy Harvester

Let $h_{2,k,n}$ denote the channel gain from the nth LED to the solar panel of user k, which is similar to (13). At user k, the received light intensity is given by

$$E_k = \frac{v}{A_s} \sum_{n=1}^{N} h_{2,k,n} \Phi_{n,\mathrm{OT}} + E_{\mathrm{a}}. \tag{41}$$

The output voltage of solar panel of user k is given as

$$U_k = \eta U_{k,\mathrm{oc}}, \tag{42}$$

Authorized licensed use limited to: TU Hamburg-Harburg. Downloaded on November 09,2024 at 13:17:55 UTC from IEEE Xplore. Restrictions apply.

where $U_{k,\text{oc}}$ is the open-circuit voltage, i.e.,

$$U_{k,\text{oc}} = \frac{1}{c_1} \ln\left(\widehat{\lambda}_{1,k} E_k + 1\right), \tag{43}$$

and $\widehat{\lambda}_{1,k} = \frac{I_{k,\text{sc,stc}} + \alpha_{k,\text{stc}}(T_\text{a} - T_\text{a,stc})}{E_{k,\text{stc}} I_{k,\text{s0}}}$, $I_{k,\text{sc,stc}}$ is short-circuit current in the STC of the solar panel of user k.

Meanwhile, at user k, the output current of the solar plane I_k is given by

$$I_k = \frac{E_k\left(I_{k,\text{sc,stc}} + \alpha_{k,\text{stc}}\left(T_\text{a} - T_\text{a,stc}\right)\right)\left(e^{c_1 U_{k,\text{oc}}} - e^{c_1 U_k}\right)}{E_\text{stc}\left(e^{c_1 U_{k,\text{oc}}} - 1\right)}. \tag{44}$$

Therefore, the average harvested power by the solar plane of user k is given by

$$\mathbb{E}\left\{P_k^{\text{MISO}}\right\} = \mathbb{E}\left\{I_k U_k\right\} \tag{45a}$$

$$\approx \Gamma \mathbb{E}\left\{E_k^2\right\} + \Gamma_k\left(\ln \widehat{\lambda}_{1,k} - 1\right)\mathbb{E}\left\{E_k\right\} \tag{45b}$$

$$= \Upsilon_k \sum_{i=1}^{K} \mathbf{h}_{2,k}^T \mathbf{g}_i \mathbf{g}_i^T \mathbf{h}_{2,k} \varepsilon_i + w_k. \tag{45c}$$

where $\Gamma_k \triangleq \frac{\eta(I_{k,\text{sc,stc}} + \alpha_{k,\text{stc}}(T_\text{a} - T_\text{a,stc}))}{c_1 E_\text{stc}}$, and $\alpha_{k,\text{stc}}$ is the temperature coefficient for short circuit current of kth solar panel, $\Upsilon_k \triangleq \Gamma_k\left(\frac{354.286v}{A_s}\right)^2$, and $w_k \triangleq \Gamma_k\left(\frac{v}{A_s}(354.286b + 27)\mathbf{h}_{2,k}^T \mathbf{1}_N + E_\text{a}\right)^2 + \Gamma_k\left(\ln \widehat{\lambda}_{1,k} - 1\right)\left(\frac{v}{A_s}(354.286b + 27)\mathbf{h}_{2,k}^T \mathbf{1}_N + E_\text{a}\right)$.

IV. The Multi-LED Multi-User SLIPT VLC Networks Design Problems

Based on the analysis of the multi-LED multi-user SLIPT VLC network, we will investigate two typical SLIPT VLC system design problems, i.e., the transmission power minimization problem and the minimum rate maximization problem.

A. Transmission Power Minimization Problem

With the explicit achievable rate expression (38) and the energy harvesting expression (45c), we aim to minimize the total transmission power, while satisfying the rate requirement of the K minimum energy harvesting requirements and dimming control constraints. Mathematically, the transmission power minimization problem of the multi-LED SLIPT VLC network can be formulated as

$$\min_{\{\mathbf{g}_k\}, I_\text{D}} \sum_{k=1}^{K} \varepsilon_k \|\mathbf{g}_k\|^2 + N I_\text{D}^2 \tag{46a}$$

$$\text{s.t. } \frac{1}{2}\log_2 \frac{2\pi\sigma^2 + \sum_{i=1}^{K}\left|\mathbf{h}_{1,k}^T \mathbf{g}_i\right|^2 e^{1+2(\alpha_i + \gamma_i \varepsilon_i)}}{2\pi\sigma^2 + 2\pi \sum_{i=1, i\neq k}^{K}\left|\mathbf{h}_{1,k}^T \mathbf{g}_i\right|^2 \varepsilon_i} \geq r_k, \quad \forall k \in \mathcal{K} \tag{46b}$$

$$\Upsilon_k \sum_{i=1}^{K} \mathbf{h}_{2,k}^T \mathbf{g}_i \mathbf{g}_i^T \mathbf{h}_{2,k} \varepsilon_i + w_k \geq \nu_k, \quad \forall k \in \mathcal{K}, \tag{46c}$$

$$\sum_{k=1}^{K} A_k \mathbf{g}_k^T \mathbf{e}_n \leq \min\left\{I_\text{D}, I_\text{H} - I_\text{D}\right\}, \quad \forall n \in \mathcal{N}, \tag{46d}$$

$$N I_\text{D} = \tau P_T, \tag{46e}$$

where r_k is the rate requirement of user k, and ν_k is the harvested power requirement of user k.

By substituting (46e) into (46d), problem (46) can be equivalently reformulated as

$$\min_{\{\mathbf{g}_k\}, I_\text{D}} \sum_{k=1}^{K} \varepsilon_k \|\mathbf{g}_k\|^2 \tag{47a}$$

$$\text{s.t. } \frac{1}{2}\log_2 \frac{2\pi\sigma^2 + \sum_{i=1}^{K}\left|\mathbf{h}_{1,k}^T \mathbf{g}_i\right|^2 e^{1+2(\alpha_i + \gamma_i \varepsilon_i)}}{2\pi\sigma^2 + 2\pi \sum_{i=1, i\neq k}^{K}\left|\mathbf{h}_{1,k}^T \mathbf{g}_i\right|^2 \varepsilon_i} \geq r_k, \quad \forall k \in \mathcal{K} \tag{47b}$$

$$\Upsilon_k \sum_{i=1}^{K} \mathbf{h}_{2,k}^T \mathbf{g}_i \mathbf{g}_i^T \mathbf{h}_{2,k} \varepsilon_i + w_k \geq \nu_k, \quad \forall k \in \mathcal{K}, \tag{47c}$$

$$\sum_{k=1}^{K} A_k \mathbf{g}_k^T \mathbf{e}_n \leq \min\left\{\frac{\tau P_T}{N}, I_\text{H} - \frac{\tau P_T}{N}\right\}, \quad \forall n \in \mathcal{N}, \tag{47d}$$

which is non-convex due to the nonconvex rate constraints (47b) and energy harvesting constraints (47c).

To solve problem (47), we first introduce following new definitions

$$\widehat{\mathbf{g}} \triangleq \left[\mathbf{g}_1^T, ..., \mathbf{g}_K^T\right]^T, \tag{48a}$$

$$\widehat{\mathbf{d}} \triangleq \left[\varepsilon_1^{1/2}, ..., \varepsilon_K^{1/2}\right]^T \otimes \mathbf{1}_N, \tag{48b}$$

$$\widehat{\mathbf{h}}_2 \triangleq \left[\hat{\varepsilon}_1 \mathbf{h}_{2,1}^T, ..., \hat{\varepsilon}_K \mathbf{h}_{2,K}^T\right]^T, \tag{48c}$$

$$\mathbf{H}_{1,k} \triangleq \text{diag}\left\{e^{1+2(\alpha_1 + \gamma_1 \varepsilon_1)}, ..., e^{1+2(\alpha_K + \gamma_K \varepsilon_K)}\right\} \otimes \left(\mathbf{h}_{1,k}\mathbf{h}_{1,k}^T\right), \tag{48d}$$

$$\widehat{\mathbf{H}}_{1,k} \triangleq \pi 2^{2r+1} \text{diag}\left\{\varepsilon_1, ..., \varepsilon_{i-1}, 0, \varepsilon_{i+1}, ..., \varepsilon_K\right\} \otimes \left(\mathbf{h}_{1,k}\mathbf{h}_{1,k}^T\right), \tag{48e}$$

$$\mathbf{H}_{2,k} \triangleq \text{diag}\left\{\varepsilon_1, ..., \varepsilon_K\right\} \otimes \left(\mathbf{h}_{2,k}\mathbf{h}_{2,k}^T\right), \tag{48f}$$

$$\mathbf{a}_n \triangleq \left[A_1, ..., A_K\right]^T \otimes \mathbf{e}_n. \tag{48g}$$

Based on the definitions (48), problem (47) can be rewritten into a concise form as

$$\max_{\widehat{\mathbf{g}}, \overline{r}} \left\|\widehat{\mathbf{g}} \odot \widehat{\mathbf{d}}\right\|^2 \tag{49a}$$

$$\text{s.t. } \widehat{\mathbf{g}}^T\left(\mathbf{H}_{1,k} - \widehat{\mathbf{H}}_{1,k}\right)\widehat{\mathbf{g}} \geq 2\pi\sigma^2\left(2^{2\ r_k} - 1\right), \quad \forall k \in \mathcal{K}, \tag{49b}$$

$$\Upsilon_k \widehat{\mathbf{g}}^T \mathbf{H}_{2,k} \widehat{\mathbf{g}} \geq \nu_k - \omega_k, \quad \forall k \in \mathcal{K}, \tag{49c}$$

$$\widehat{\mathbf{g}}^T \mathbf{a}_n \mathbf{a}_n^T \widehat{\mathbf{g}} \leq b, \quad \forall n \in \mathcal{N}, \tag{49d}$$

$$\tag{49e}$$

where $b = \min\left\{\frac{\tau^2 P_T^2}{N^2}, \left(I_\text{H} - \frac{\tau P_T}{N}\right)^2\right\}$.

Authorized licensed use limited to: TU Hamburg-Harburg. Downloaded on November 09,2024 at 13:17:55 UTC from IEEE Xplore. Restrictions apply.

To handle the non-convex constraints (49b) and (49c), we exploit the SDR technique [41] Specifically, given the property

$$\mathbf{G} = \widehat{\mathbf{g}}\widehat{\mathbf{g}}^T \Leftrightarrow \mathbf{G} \succ \mathbf{0}, \quad \mathrm{rank}\,(\mathbf{G}) = 1, \tag{50}$$

the SDR technique will neglect the non-convex rank constraint $\mathrm{rank}\,(\mathbf{G}) = 1$, and only remain the convex positive semidefinite constraint $\mathbf{G} \succ \mathbf{0}$, which transfers a non-convex constraint to a higher dimension convex feasible region. The idea of SDR was proposed as early as in 1979 [42], and was theoretically proved by the seminal work [43]. The SDR is a powerful and efficient approximation technique for handling difficult nonconvex optimization problems with high quality solutions, which has been successfully applied in signal processing and communications areas [41]. Thus, by applying SDR, problem (49) can be relaxed as

$$\min_{\widehat{\mathbf{G}}} \ \mathrm{Tr}\left(\mathbf{G} \odot \left(\widehat{\mathbf{d}}\widehat{\mathbf{d}}^T\right)\right) \tag{51a}$$

$$\text{s.t. } \mathrm{Tr}\left(\mathbf{G}\left(\mathbf{H}_{1,k} - \widehat{\mathbf{H}}_{1,k}\right)\right) \geq 2\pi\sigma^2\left(2^{2\ r_k} - 1\right), \quad \forall k \in \mathcal{K}, \tag{51b}$$

$$\Upsilon_k \mathrm{Tr}\left(\mathbf{G}\mathbf{H}_{2,k}\right) \geq \nu_k - \omega_k, \quad \forall k \in \mathcal{K}, \tag{51c}$$

$$\mathrm{Tr}\left(\mathbf{G}\mathbf{a}_n\mathbf{a}_n^T\right) \leq b, \quad \forall n \in \mathcal{N}, \tag{51d}$$

$$\mathbf{G} \succeq \mathbf{0}, \tag{51e}$$

which is a convex SDP. Problem (51) can be efficiently handled by applying the standard interior-point algorithm [44], [45] with a complexity of $\mathcal{O}\left((2K+N)\,N^{1/2}\log(1/\zeta)\right)$ for a given solution accuracy $\zeta > 0$ [41]. Let $\mathbf{G}^*$ denoted the obtained optimal solution of problem (51). However, due to the SDR, the rank of $\mathbf{G}^*$ may not be 1. If $\mathrm{rank}\,(\mathbf{G}^*) = 1$, we can obtain the optimal beamformer vector $\widehat{\mathbf{g}}$ of problem (51) by eigenvalue decomposition; If $\mathrm{rank}\,(\mathbf{G}^*) > 1$, we can apply the Gaussian randomization procedure [41] to $\mathbf{G}^*$, and obtain a high-quality feasible solution $\widehat{\mathbf{g}}$ of problem (51).

B. Minimum Rate Maximization Problem

We consider the users rate fair strategy to maximize the minimal rate by optimizing the beamformers design, while satisfying both minimum energy harvesting requirements and dimming control constraints. It can be mathematically formulated as

$$\max_{\{\mathbf{g}_k\}, I_{\mathrm{D}}} \ \min_{\forall k \in \mathcal{K}} \ R_k \tag{52a}$$

$$\text{s.t. } \Upsilon_k \sum_{i=1}^{K} \mathbf{h}_{2,k}^T \mathbf{g}_i \mathbf{g}_i^T \mathbf{h}_{2,k} \varepsilon_i + w_k \geq \nu_k, \quad \forall k \in \mathcal{K}, \tag{52b}$$

$$\sum_{k=1}^{K} A_k \mathbf{g}_k^T \mathbf{e}_n \leq \min\left\{I_{\mathrm{D}}, I_{\mathrm{H}} - I_{\mathrm{D}}\right\}, \quad \forall n \in \mathcal{N}, \tag{52c}$$

$$N I_{\mathrm{D}} = \tau P_T, \tag{52d}$$

$$\sum_{k=1}^{K} \varepsilon_k \|\mathbf{g}_k\|^2 + N I_{\mathrm{D}}^2 \leq \overline{P}, \tag{52e}$$

where ν_k is the harvested power requirement of user k, and $\overline{P}$ is the maximal total transmission power.

By substituting (52d) into (52c) and introducing an auxiliary variable $\overline{r} \triangleq \min_{\forall k \in \mathcal{K}} R_k$, problem (52) can be equivalently reformulated as

$$\max_{\{\mathbf{g}_i\}, \overline{r}} \ \overline{r} \tag{53a}$$

$$\text{s.t. } \frac{1}{2}\log_2 \frac{2\pi\sigma^2 + \sum_{i=1}^{K}\left|\mathbf{h}_{1,k}^T\mathbf{g}_i\right|^2 e^{1+2(\alpha_i+\gamma_i\varepsilon_i)}}{2\pi\sigma^2 + 2\pi\sum_{i=1, i\neq k}^{K}\left|\mathbf{h}_{1,k}^T\mathbf{g}_i\right|^2 \varepsilon_i} \geq \overline{r}, \quad \forall k \in \mathcal{K} \tag{53b}$$

$$\Upsilon_k \sum_{i=1}^{K} \mathbf{h}_{2,k}^T \mathbf{g}_i \mathbf{g}_i^T \mathbf{h}_{2,k} \varepsilon_i + w_k \geq \nu_k, \quad \forall k \in \mathcal{K}, \tag{53c}$$

$$\sum_{k=1}^{K} A_k \mathbf{g}_k^T \mathbf{e}_n \leq \min\left\{\frac{\tau P_T}{N}, I_{\mathrm{H}} - \frac{\tau P_T}{N}\right\}, \quad \forall n \in \mathcal{N}, \tag{53d}$$

$$\sum_{k=1}^{K} \varepsilon_k \|\mathbf{g}_k\|^2 + N I_{\mathrm{D}}^2 \leq \overline{P}, \tag{53e}$$

which is non-convex due to the nonconvex rate constraints (53b) and energy harvesting constraints (53c).

Based on the definitions (48), problem (53) can be rewritten into a concise form as

$$\max_{\widehat{\mathbf{g}}, \overline{r}} \ \overline{r} \tag{54a}$$

$$\text{s.t. } \widehat{\mathbf{g}}^T\left(\mathbf{H}_{1,k} - \widehat{\mathbf{H}}_{1,k}\right)\widehat{\mathbf{g}} \geq 2\pi\sigma^2\left(2^{2\overline{r}} - 1\right), \quad \forall k \in \mathcal{K}, \tag{54b}$$

$$\Upsilon_k \widehat{\mathbf{g}}^T \mathbf{H}_{2,k} \widehat{\mathbf{g}} \geq \nu_k - \omega_k, \quad \forall k \in \mathcal{K}, \tag{54c}$$

$$\widehat{\mathbf{g}}^T \mathbf{a}_n \mathbf{a}_n^T \widehat{\mathbf{g}} \leq b, \quad \forall n \in \mathcal{N}, \tag{54d}$$

$$\left\|\widehat{\mathbf{g}} \odot \widehat{\mathbf{d}}\right\|^2 \leq \overline{P} - N I_{\mathrm{D}}^2, \tag{54e}$$

where $b = \min\left\{\frac{\tau^2 P_T^2}{N^2}, \left(I_{\mathrm{H}} - \frac{\tau P_T}{N}\right)^2\right\}$.

To handle the non-convex constraints (54b) and (54c), we exploit the SDR technique. Specifically, by neglecting the non-convex rank constraint $\mathrm{rank}\,(\mathbf{G}) = 1$, problem (54) can be relaxed as

$$\max_{\mathbf{G}, \overline{r}} \ \overline{r} \tag{55a}$$

$$\text{s.t. } \mathrm{Tr}\left(\mathbf{G}\left(\mathbf{H}_{1,k} - \widehat{\mathbf{H}}_{1,k}\right)\right) \geq 2\pi\sigma^2\left(2^{2\overline{r}} - 1\right), \quad \forall k \in \mathcal{K}, \tag{55b}$$

$$\Upsilon_k \mathrm{Tr}\left(\mathbf{G}\mathbf{H}_{2,k}\right) \geq \nu_k - \omega_k, \quad \forall k \in \mathcal{K}, \tag{55c}$$

$$\mathrm{Tr}\left(\mathbf{G}\mathbf{a}_n\mathbf{a}_n^T\right) \leq b, \quad \forall n \in \mathcal{N}, \tag{55d}$$

$$\mathrm{Tr}\left(\mathbf{G} \odot \left(\widehat{\mathbf{d}}\widehat{\mathbf{d}}^T\right)\right) \leq \overline{P} - N I_{\mathrm{D}}^2, \tag{55e}$$

$$\mathbf{G} \succeq \mathbf{0}, \tag{55f}$$

which is still non-convex due to the variable $\overline{r}$ in constraint (55b).

However, problem (55) is convex for a given $\overline{r}$. Thus, problem (55) is a quasi-convex optimization problem, whose globally optimal solutions can be searched by a simple bisection method. Specifically, for a given $\overline{r} > 0$, problem (55) can

Authorized licensed use limited to: TU Hamburg-Harburg. Downloaded on November 09,2024 at 13:17:55 UTC from IEEE Xplore. Restrictions apply.

be reduced to a sequence of SDP feasibility subproblems as

$$\text{find } \mathbf{G} \tag{56a}$$
$$\text{s.t. } \mathrm{Tr}\left(\mathbf{G}\left(\mathbf{H}_{1,k}-\widehat{\mathbf{H}}_{1,k}\right)\right) \geq 2\pi\sigma^2\left(2^{2\overline{r}}-1\right), \quad \forall k \in \mathcal{K}, \tag{56b}$$
$$\Upsilon_k \mathrm{Tr}\left(\mathbf{G}\mathbf{H}_{2,k}\right) \geq \nu_k - \omega_k, \quad \forall k \in \mathcal{K}, \tag{56c}$$
$$\mathrm{Tr}\left(\mathbf{G}\mathbf{a}_n\mathbf{a}_n^T\right) \leq b, \quad \forall n \in \mathcal{N}, \tag{56d}$$
$$\mathrm{Tr}\left(\mathbf{G} \odot \left(\widehat{\mathbf{d}}\widehat{\mathbf{d}}^T\right)\right) \leq \overline{P} - NI_{\mathrm{D}}^2 \tag{56e}$$
$$\mathbf{G} \succeq \mathbf{0}, \tag{56f}$$

which can be efficiently solved by using the interior-point algorithm [44], [45] with a complexity of $\mathcal{O}\left((2K+N+1)N^{1/2}\log(1/\zeta)\right)$ for a given solution accuracy $\zeta > 0$ [41].

The bisection method to cope problem (55) is described in Algorithm 1. Let $\mathbf{G}^{\text{opt}}$ denote the optimal solution of problem (55), where $\mathrm{rank}\left(\mathbf{G}^{\text{opt}}\right) \geq 1$ due to the SDR. At this point, we may apply similar techniques as we did in problem (51) to deal with the cases of $\mathrm{rank}\left(\mathbf{G}^{\text{opt}}\right) = 1$ and $\mathrm{rank}\left(\mathbf{G}^{\text{opt}}\right) > 1$. Therefore, the optimal beamformer or a quasi-optimal solution can be obtained.

Algorithm 1 Bisection Search

1) Given some $\varepsilon_e > 0$ (termination parameter), choose proper r_l and r_u such that $r^{\text{opt}} \in [r_l, r_u]$;
2) Let $r_m = \frac{r_l+r_u}{2}$, and check the feasibility of the problem (56);
3) If a feasible solution is found, set $r_l = r_m$; otherwise, set $r_u = r_m$;
4) Terminate if $r_u - r_l \leq \varepsilon_e$, and let $r^{\text{opt}} = r_m$; otherwise, go to step 2).

V. Simulation Results

In this section, we present some numerical results to analyze the influence of the key factors on the system performance. Assume that the peak amplitude and the variance of input data s are $A = 2$ and $\varepsilon = 1$, respectively. The parameters of the LED, PD and solar panel are summarized in Table II. The parameters of LEDs and PDs are quoted from [15], [46], and the circuit architecture of the solar panel is present in [47]–[49]. We adopt the single-crystalline silicon solar cells in photovoltaic(PV) module. The power spectral density of the additive noise is -98.82dBm.

A. Simulation Results of Point-to-Point SLIPT VLC Systems

In the following, we present simulation results of the SISO VLC system. For comparison, the system with PD based energy harvester and solar panel based information receiver is considered. According to the results in [50], [51], the energy collected by the PD is given by

$$Q_{\text{PD}}(\Delta t) = 0.41\left(\Upsilon h_1^2 g\varepsilon + w\right)\Delta t. \tag{57}$$

According to [52], [53], the achievable rate of the solar panel based information receiver is given by

$$R_{\text{SISO,solar}}^{\text{L}} = \frac{1}{2}\log_2\left(1 + \frac{(0.016h_2)^2 g e^{1+2(\alpha+\gamma\varepsilon)}}{2\pi\sigma^2}\right). \tag{58}$$

TABLE I
Parameters of the LED, PD and Solar Panel

LED emission semi-angle	$\phi_{1/2}$	$60°$
Half of PD's filed-of-view	Ψ_1	$60°$
Half of solar panel's filed-of-view	Ψ_2	$60°$
Detector area of PD	A_{PD}	1cm^2
Detector area of solar panel	A_{s}	10cm^2
Average noise power	σ^2	-98.82dBm
Allowed total optical power	P_T	50w
Dimming level	τ	0.9
Short-circuit current in the STC	$I_{\text{sc,stc}}$	200mA
Open-circuit voltage in the STC	$U_{\text{oc,stc}}$	5V

TABLE II
Locations of the PDs, Solar Panels and LEDs

Location		Location	
PD1	(5.1,6.0,1.5)	PD2	(5.1,4.0,1.5)
Solar1	(5.0,5.1,1.5)	Solar2	(5.0,4.9,1.5)
LED1	(4.9,4.9,3.0)	LED2	(4.9,5.0,3.0)
LED3	(4.9,5.1,3.0)	LED4	(5.0,4.9,3.0)
LED5	(5.0,5.0,3.0)	LED6	(5.0,5.1,3.0)
LED7	(5.1,4.9,3.0)	LED8	(5.1,5.0,3.0)
LED9	(5.1,5.1,3.0)		

Fig. 7 (a) depicts the curves of the harvested energy Q_{solar}, Q_{PD} and the achievable rate $R_{\text{SISO,PD}}^{\text{L}}$, $R_{\text{SISO,solar}}^{\text{L}}$versus the DC offset I_{D}. It be observed that, as I_{D} increases, both Q_{solar} and Q_{PD} increase logarithmically. This is because the order of magnitude of $\Gamma\left(\ln\left(\widehat{\lambda}\right)-1\right)\left(\frac{354.286vh_2I_{\text{D}}}{A_{\text{s}}}\right)$ dominates in P_{solar} as show in (25). Moreover, we can observe that Q_{solar} is higher than Q_{PD}, which verifies that the solar panel is more suitable as an energy harvester.

The achievable rate $R_{\text{SISO,PD}}^{\text{L}}$ first increases, and then slowly decreases. This is because that as shown in (29), $R_{\text{SISO,PD}}^{\text{L}}$ is not a monotonic function of the average optical power I_{D}. Note that in the simulation, the power gain g equals to $\min\left\{\frac{I_{\text{D}}^2}{A^2}, \frac{(I_{\text{H}}-I_{\text{D}})^2}{A^2}, \frac{\overline{P_e}-I_{\text{D}}^2}{\varepsilon}\right\}$. When the I_{D} is low, as I_{D} increases, the power gain g increases quadratically. While for the high I_{D}, the power gain of the PA g decreases quadratically with the increase of I_{D}. Besides, we can observe that achievable rate of PD $R_{\text{SISO,PD}}^{\text{L}}$ is higher than $R_{\text{SISO,solar}}^{\text{L}}$ of the solar panel, which shows the PD is more appropriate as an information receiver.

In Fig. 7 (b) , we can observe that as g increases, the harvested energy Q_{solar} increases slowly, while both the achievable rates increase quickly at first, and then slowly, which indicates that increasing power gain g is effective to increase the transmission rate, while is not efficient to improve energy transfer. This figure also tells us that: the solar panel works better than PD in terms of harvesting energy, while could not beat PD in terms of receiving information.

B. Simulation Results of the Multi-LED Multi-User SLIPT VLC Network

For the multi-LED multi-user SLIPT VLC network, assume there are 9 LEDs and 2 users, i.e., $N = 9$ and $K = 2$.

Authorized licensed use limited to: TU Hamburg-Harburg. Downloaded on November 09,2024 at 13:17:55 UTC from IEEE Xplore. Restrictions apply.

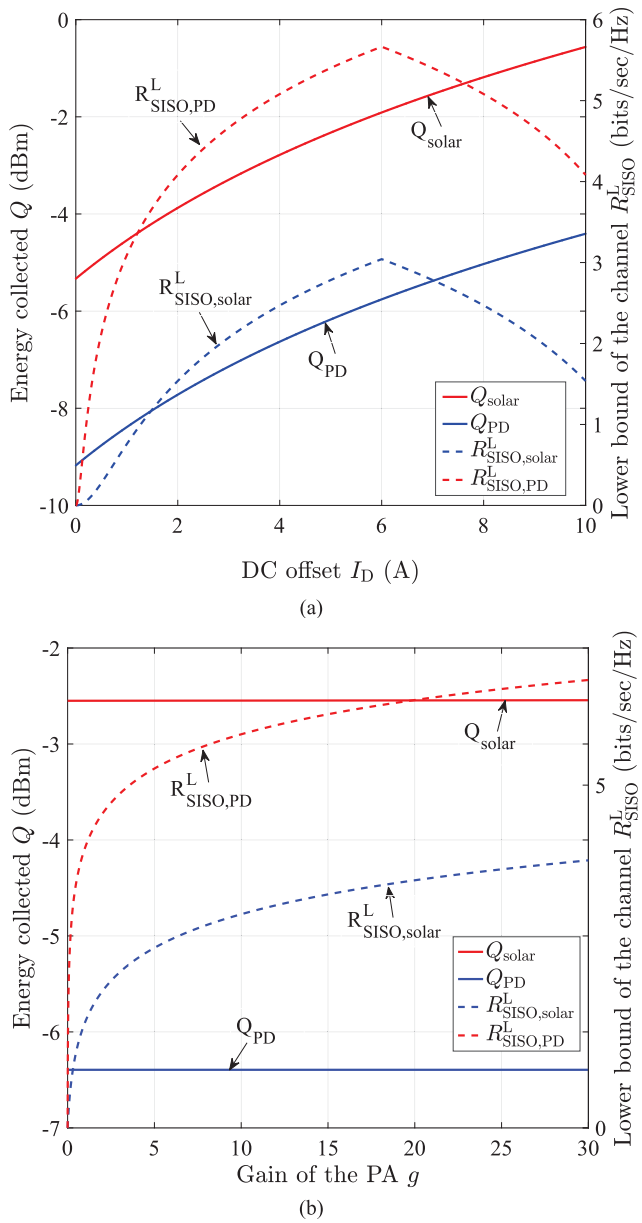

Fig. 7. (a) The harvested energy Q_{solar} and Q_{PD} and the achievable rate $R^{\mathrm{L}}_{\mathrm{SISO,PD}}$ and $R^{\mathrm{L}}_{\mathrm{SISO,solar}}$ versus the DC offset I_{D}; (b) The harvested energy Q_{solar} and Q_{PD} and the achievable rate $R^{\mathrm{L}}_{\mathrm{SISO,PD}}$ and $R^{\mathrm{L}}_{\mathrm{SISO,solar}}$ versus power gain of the PA g.

Moreover, assume that $A \triangleq A_1 = A_2 = 2$, $\varepsilon \triangleq \varepsilon_1 = \varepsilon_2 = 1$, $\bar{r} \triangleq r_1 = r_2$ and $\bar{v} \triangleq v_1 = v_2$. The locations of PDs, solar panels and LEDs are listed in Table II.

Fig. 8 (a) shows the curves of the total transmission power $\sum_{k=1}^{K} \varepsilon_k \|\mathbf{g}_k\|^2 + N I_{\mathrm{D}}^2$ versus the number of LEDs N with $\bar{r} = 0.5, 1$ and 1.5bits/sec/Hz, $\bar{v}$= 4.7173 dBm and $K = 2$. We can see that the total power in the three cases of $\bar{r}$ decrease as the number of LEDs N increases. Moreover, the higher $\bar{r}$, the larger transmission power is required.

In Fig. 8 (b), we plot the electrical power $\sum_{k=1}^{K} \varepsilon_k \|\mathbf{g}_k\|^2$versus the rate threshold $\bar{r}$. We observe that the electrical power

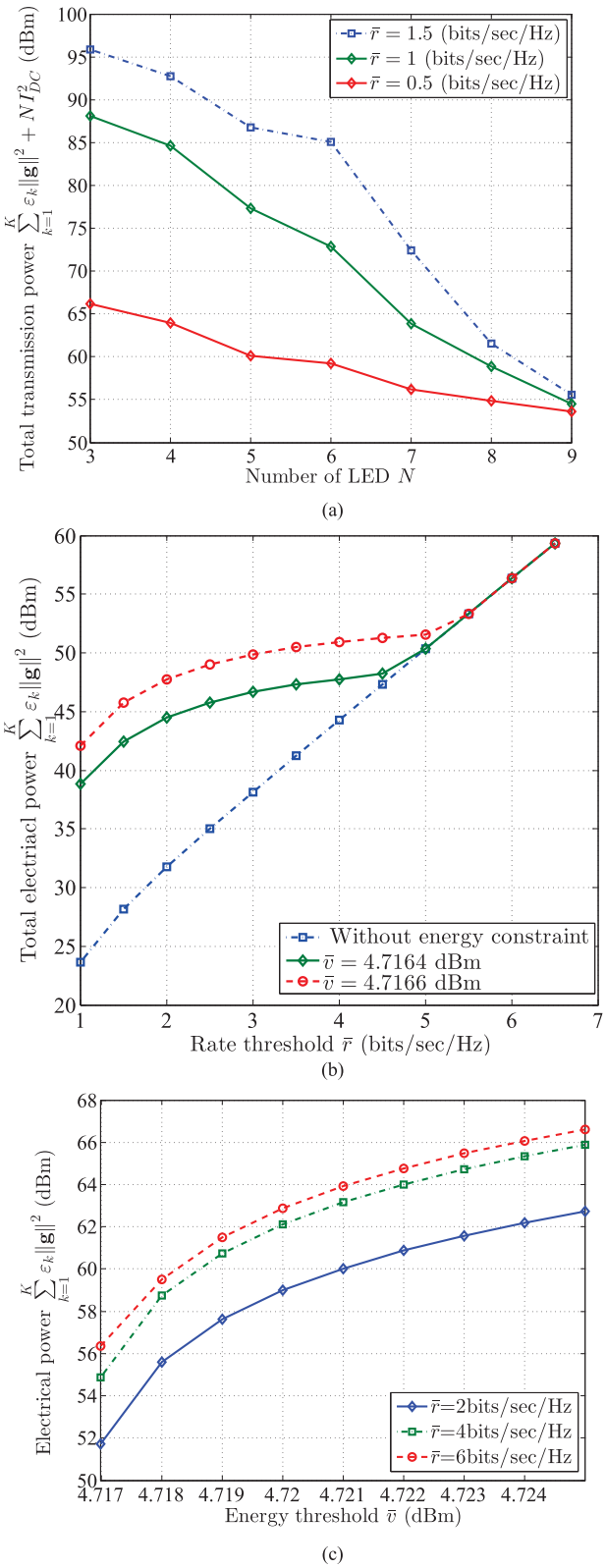

Fig. 8. (a) The transmit power $\sum_{k=1}^{K} \varepsilon_k \|\mathbf{g}_k\|^2$ versus the number of LEDs N with $\bar{r} = 0.5, 1$ and 1.5 bits/sec/Hz, $\bar{v} = 4.7173$dBm and $K = 2$; (b) The transmit power $\sum_{k=1}^{K} \varepsilon_k \|\mathbf{g}_k\|^2$ versus rate threshold $\bar{r}$; (c) The electrical power $\sum_{k=1}^{K} \varepsilon_k \|\mathbf{g}_k\|^2$ versus energy harvest threshold $\bar{v}$ with $\bar{r} = 2, 4$ and 6bits/sec/Hz.

Authorized licensed use limited to: TU Hamburg-Harburg. Downloaded on November 09,2024 at 13:17:55 UTC from IEEE Xplore. Restrictions apply.

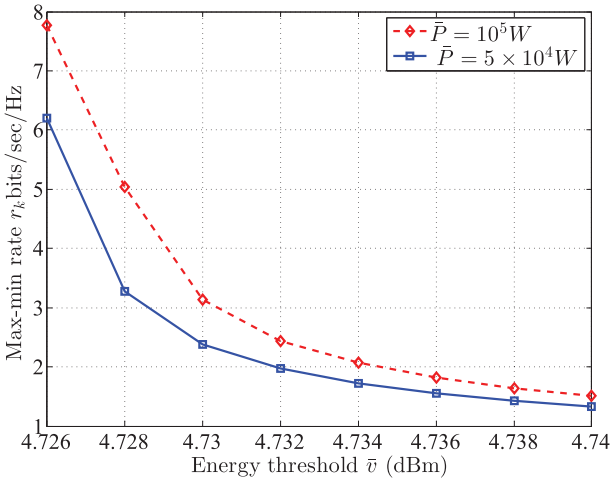

Fig. 9. The max-min rate $\bar{r}$ versus energy threshold v_k with $\overline{P} = 10^5 W$ and $\overline{P} = 5 \times 10^4 W$, $K = 2$.

$\sum_{k=1}^{K} \varepsilon_k \|\mathbf{g}_k\|^2$ monotonously increases as the rate threshold $\bar{r}$ increases, with or without the harvested energy constraint. Comparing the $\bar{v} = 4.7173$ dBm case and the $\bar{v} = 4.7188$ dBm case, the higher energy harvest threshold, the more transmission power is consumed.

Fig. 8 (c) shows the electrical power $\sum_{k=1}^{K} \varepsilon_k \|\mathbf{g}_k\|^2$ versus energy harvest threshold $\bar{v}$ with $\bar{r} = 2, 4$ and 6 $bits/sec/Hz$. We can observe that the electrical power $\sum_{k=1}^{K} \varepsilon_k \|\mathbf{g}_k\|^2$ increases approximately in logarithm as energy harvest threshold $\bar{v}$ increases. Also, it is intuitive that the higher rate threshold, the more transmission power is needed.

Fig. 9 shows the max-min rate $\bar{r} \triangleq \min_{\forall k \in \mathcal{K}} R_k$ versus energy threshold $\bar{v}$ for problem (52), where with $\overline{P} = 10^5 W$, $K = 2$. We can see that the max-min rate $\bar{r}$ decreases as energy threshold $\bar{v}$ increases. Finally, by comparing the two power budget cases $\overline{P} = 5 \times 10^4 W$, we can see that the higher transmission power budget, the higher max-min rate $\bar{r}$.

VI. Conclusion

In this work, we design a novel SLIPT VLC system, which uses the PD and the solar panel as the information receiver and the energy harvester, respectively. By systematically analyzing both information receiver and energy harvester, we characterize the illumination-rate-energy region of the SLIPT VLC system. Furthermore, for the multi-LED multi-user SLIPT VLC network, we derive the explicit expressions for both information transfer and energy harvesting, and investigate the beamformer designs for the total transmit power minimization problem and the minimal rate maximization problem, respectively. Numerical results verify that our proposed beamformer designs can guarantee the SLIPT VLC network performance.

References

[1] T. Komine and M. Nakagawa, "Fundamental analysis for visible-light communication system using LED lights," *IEEE Trans. Consum. Electron.*, vol. 50, no. 1, pp. 100–107, Feb. 2004.

[2] H. Elgala, R. Mesleh, and H. Haas, "Indoor optical wireless communication: Potential and state-of-the-art," *IEEE Commun. Mag.*, vol. 49, no. 9, pp. 56–62, Sep. 2011.

[3] A. Jovicic, J. Li, and T. Richardson, "Visible light communication: Opportunities, challenges and the path to market," *IEEE Commun. Mag.*, vol. 51, no. 12, pp. 26–32, Dec. 2013.

[4] P. H. Pathak, X. Feng, P. Hu, and P. Mohapatra, "Visible light communication, networking, and sensing: A survey, potential and challenges," *IEEE Commun. Surveys Tuts.*, vol. 17, no. 4, pp. 2047–2077, 4th. Quart., 2015.

[5] C. K. Ho and R. Zhang, "Optimal energy allocation for wireless communications with energy harvesting constraints," *IEEE Trans. Signal Process.*, vol. 60, no. 9, pp. 4808–4818, Sep. 2012.

[6] X. Zhou, R. Zhang, and C. K. Ho, "Wireless information and power transfer: Architecture design and rate-energy tradeoff," *IEEE Trans. Commun.*, vol. 61, no. 11, pp. 4754–4767, Nov. 2013.

[7] P. D. Diamantoulakis, G. K. Karagiannidis, and Z. Ding, "Simultaneous lightwave information and power transfer (SLIPT)," *IEEE Trans. Green Commun. NetW.*, vol. 2, no. 3, pp. 764–773, Sep. 2018.

[8] Z. Wang, D. Tsonev, S. Videv, and H. Haas, "On the design of a solar-panel receiver for optical wireless communications with simultaneous energy harvesting," *IEEE J. Sel. Areas Commun.*, vol. 33, no. 8, pp. 1612–1623, Aug. 2015.

[9] H. G. Sandalidis, A. Vavoulas, T. A. Tsiftsis, and N. Vaiopoulos, "Illumination, data transmission, and energy harvesting: The threefold advantage of VLC," *Appl. Opt.*, vol. 56, no. 12, pp. 3421–3427, Apr. 2017.

[10] X. Chen, C. Min, and J. Guo, "Visible light communication system using silicon photocell for energy gathering and data receiving," *Int. J. Opt.*, vol. 2017, pp. 1–5, Jan. 2017.

[11] G. Pan, P. D. Diamantoulakis, Z. Ma, Z. Ding, and G. K. Karagiannidis, "Simultaneous lightwave information and power transfer: Policies, techniques, and future directions," *IEEE Access*, vol. 7, pp. 28250–28257, 2019.

[12] G. Pan, J. Ye, and Z. Ding, "Secure hybrid VLC-RF systems with light energy harvesting," *IEEE Trans. Commun.*, vol. 65, no. 10, pp. 4348–4359, Oct. 2017.

[13] T. Rakia, H.-C. Yang, F. Gebali, and M.-S. Alouini, "Optimal design of dual-hop VLC/RF communication system with energy harvesting," *IEEE Commun. Lett.*, vol. 20, no. 10, pp. 1979–1982, Oct. 2016.

[14] Y. Li, N. Huang, J.-Y. Wang, Z. Yang, and W. Xu, "Sum rate maximization for VLC systems with simultaneous wireless information and power transfer," *IEEE Photon. Technol. Lett.*, vol. 29, no. 6, pp. 531–534, Mar. 15, 2017.

[15] *Silicon PIN Photodiode SFH206K*. Accessed: 1998. [Online]. Available: https://www.alldatasheet.com/datasheet-pdf/pdf/45619/siemens/sfh206k.html

[16] S.-M. Kim and J.-S. Won, "Simultaneous reception of visible light communication and optical energy using a solar cell receiver," in *Proc. IEEE Int. Conf. ICT Convergence*, Jeju Island, South Korea, Oct. 2013, pp. 896–897.

[17] J. G. Smith, "The information capacity of amplitude- and variance-constrained scalar Gaussian channels," *Inf. Control*, vol. 18, no. 3, pp. 203–219, Apr. 1971.

[18] T. H. Chan, S. Hranilovic, and F. R. Kschischang, "Capacity-achieving probability measure for conditionally Gaussian channels with bounded inputs," *IEEE Trans. Inf. Theory*, vol. 51, no. 6, pp. 2073–2088, Jun. 2005.

[19] S. Ma, R. Yang, H. Li, Z. L. Dong, H. Gu, and S. Li, "Achievable rate with closed-form for SISO channel and broadcast channel in visible light communication networks," *J. Lightw. Technol.*, vol. 35, no. 14, pp. 2778–2787, Jul. 15, 2017.

[20] *Luxeon TX Extreme Efficacy and Best Performance*. Accessed: 2018. [Online]. Available: http://www.mouser.com/ds/2/602/DS133-542348.pdf

[21] S. Rajagopal, R. D. Roberts, and S.-K. Lim, "IEEE 802.15.7 visible light communication: Modulation schemes and dimming support," *IEEE Commun. Mag.*, vol. 50, no. 3, pp. 72–82, Mar. 2012.

[22] Q. Gao, C. Gong, and Z. Xu, "Joint transceiver and offset design for visible light communications with input-dependent shot noise," *IEEE Trans. Wireless Commun.*, vol. 16, no. 5, pp. 2736–2747, May 2017.

[23] S. Yao, X. Zhang, H. Qian, and X. Luo, "Joint dimming and data transmission optimization for multi-user visible light communication system," *IEEE Access*, vol. 5, pp. 5455–5462, 2017.

Authorized licensed use limited to: TU Hamburg-Harburg. Downloaded on November 09,2024 at 13:17:55 UTC from IEEE Xplore. Restrictions apply.

[24] K. Ying, H. Qian, R. J. Baxley, and G. T. Zhou, "MIMO transceiver design in dynamic-range-limited VLC systems," *IEEE Photon. Technol. Lett.*, vol. 28, no. 22, pp. 2593–2596, Nov. 15, 2016.

[25] T. Fath and H. Haas, "Performance comparison of MIMO techniques for optical wireless communications in indoor environments," *IEEE Trans. Commun.*, vol. 61, no. 2, pp. 733–742, Feb. 2013.

[26] T. Q. Wang, Y. A. Sekercioglu, and J. Armstrong, "Analysis of an optical wireless receiver using a hemispherical lens with application in MIMO visible light communications," *IEEE J. Lightw. Technol.*, vol. 31, no. 11, pp. 1744–1754, Apr. 12, 2013.

[27] K. Ying, H. Qian, R. J. Baxley, and S. Yao, "Joint optimization of precoder and equalizer in MIMO VLC systems," *IEEE J. Sel. Areas Commun.*, vol. 33, no. 9, pp. 1949–1958, Sep. 2015.

[28] J. M. Kahn and J. R. Barry, "Wireless infrared communications," *Proc. IEEE*, vol. 85, no. 2, pp. 265–298, Feb. 1997.

[29] Z. Wang, D. Tsonev, S. Videv, and H. Haas, "Towards self-powered solar panel receiver for optical wireless communication," in *Proc. IEEE Int. Conf. Commun. (ICC)*, Sydney, NSW, Australia, Jun. 2014, pp. 3348–3353.

[30] J. M. Palmer. (2003). *Radiometry and Photometry FAQ*. [Online]. Available: https://employeepages.scad.edu/~kwitte/documents/Photometry_FAQ.PDF

[31] S. Ma, T. Zhang, S. Lu, H. Li, Z. Wu, and S. Li, "Energy efficiency of SISO and MISO in visible light communication systems," *J. Lightw. Technol.*, vol. 36, no. 12, pp. 2499–2509, Jun.15, 2018.

[32] Y.-C. Kuo, T.-J. Liang, and J.-F. Chen, "Novel maximum-power-point-tracking controller for photovoltaic energy conversion system," *IEEE Trans. Ind. Electron.*, vol. 48, no. 3, pp. 594–601, Jun. 2001.

[33] C. Hua and C. Shen, "Study of maximum power tracking techniques and control of DC/DC converters for photovoltaic power system," in *Proc. 29th Annual IEEE Power Electron. Spec. Conf.*, vol. 1, May 1998, pp. 86–93.

[34] D.-Y. Lee, H.-J. Noh, D.-S. Hyun, and I. Choy, "An improved MPPT converter using current compensation method for small scaled PV-applications," in *Proc. 18th Annu. IEEE APEC*, vol. 1, Feb. 2003, pp. 540–545.

[35] D. Dondi, A. Bertacchini, D. Brunelli, L. Larcher, and L. Benini, "Modeling and optimization of a solar energy harvester system for self-powered wireless sensor networks," *IEEE Trans. Ind. Electron.*, vol. 55, no. 7, pp. 2759–2766, Jul. 2008.

[36] F. Adamo, F. Attivissimo, A. Di Nisio, and M. Spadavecchia, "Characterization and testing of a tool for photovoltaic panel modeling," *IEEE Trans. Instrum. Meas.*, vol. 60, no. 5, pp. 1613–1622, May 2011.

[37] A. Nasiri, S. A. Zabalawi, and G. Mandic, "Indoor power harvesting using photovoltaic cells for low-power applications," *IEEE Trans. Ind. Electron.*, vol. 56, no. 11, pp. 4502–4509, Nov. 2009.

[38] J. Fakidis, S. Videv, S. Kucera, H. Claussen, and H. Haas, "Indoor optical wireless power transfer to small cells at nighttime," *J. Lightw. Technol.*, vol. 34, no. 13, pp. 3236–3258, Jul. 1, 2016.

[39] D. Sera, R. Teodorescu, and P. Rodriguez, "PV panel model based on datasheet values," in *Proc. IEEE Int. Symp. Ind. Electron.*, Jun. 2007, pp. 2392–2396.

[40] W. De Soto, S. A. Klein, and W. A. Beckman, "Improvement and validation of a model for photovoltaic array performance," *Solar Energy*, vol. 80, no. 1, pp. 78–88, 2006.

[41] Z.-Q. Luo, W.-K. Ma, A. M.-C. So, Y. Ye, and S. Zhang, "Semidefinite relaxation of quadratic optimization problems," *IEEE Signal Process. Mag.*, vol. 27, no. 3, pp. 20–34, May 2010.

[42] L. Lovász, "On the Shannon capacity of a graph," *IEEE Trans. Inf. Theory*, vol. IT-25, no. 1, pp. 1–7, Jan. 1979.

[43] M. X. Goemans and D. P. Williamson, "Improved approximation algorithms for maximum cut and satisfiability problems using semidefinite programming," *J. ACM*, vol. 42, no. 6, pp. 1115–1145, Nov. 1995.

[44] Y. Ye, *Interior Point Algorithms: Theory and Analysis* (Discrete Mathematics and Optimization). Hoboken, NJ, USA: Wiley, 1997.

[45] M. Grant and S. Boyd. *CVX: Matlab Software for Disciplined Convex Programming*. Accessed: Jun. 2009. [Online]. Available: http://stanford.edu/boyd/cvx

[46] *1.5MHz, 30A High-Efficiency, LED Driver with Rapid LED Current Pulsing*. Accessed: 2006. [Online]. Available: https://pdf1.alldatasheetcn.com/datasheet-pdf/view/164822/MAXIM/MAX16818.html

[47] D. Dondi, D. Brunelli, L. Benini, P. Pavan, A. Bertacchini, and L. Larcher, "Photovoltaic cell modeling for solar energy powered sensor networks," in *Proc. 2nd Int. Workshop Adv. Sensors Interface (IWASI)*, Jun. 2007, pp. 1–6.

[48] *BQ25504 Ultra Low-Power Boost Converter With Battery Management for Energy Harvester Applications*. Accessed: Mar. 2019. [Online]. Available: http://101.96.10.45/www.ti.com/lit/ds/symlink/bq25504.pdf

[49] *CY39C831 ultra low voltage boost PMIC for solar/thermal energy harvesting*. Accessed: 2019. [Online]. Available: http://www.cypress.com/file/216476/download

[50] G. M. Pour, M. K. Benyhesan, and W. D. Leon-Salas, "Energy harvesting using substrate photodiodes," *IEEE Trans. Circuits Syst., II, Exp. Briefs*, vol. 61, no. 7, pp. 501–505, Jul. 2014.

[51] M. A. Green, Y. Hishikawa, E. D. Dunlop, D. H. Levi, J. Hohl-Ebinger, and A. W. Ho-Baillie, "Solar cell efficiency tables (version 52)," *Progr. Photovolt.*, vol. 26, no. 7, pp. 427–436, 2018.

[52] Y. Y. An, X. D. Zeng, and Z. J. Feng, *Photoelectric Detection and Signal Processing*. Beijing, China: Science Press, 2010.

[53] N. Chi, *Key Devices and Applications of LED Visible Light Communication*. Beijing, China: Post and Telecom Press, 2015.

Shuai Ma received the B.S. and Ph.D. degrees in communication and information systems from Xidian University, Xi'an, China, in 2009 and 2016, respectively. From December 2014 to December 2015, he was a Visiting Scholar with the Department of Electrical and Computer Engineering, Texas A&M University, College Station, TX, USA. Since 2019, he has been an Associate Professor with the School of Information and Control Engineering, China University of Mining and Technology, Xuzhou, China. His research interests include visible light communication, wireless communications, and network information theory.

Fan Zhang received the B.S. degree from the China University of Mining and Technology, Xuzhou, China, in 2018, where she is currently pursuing the M.E. degree in information and communication engineering with the School of Information and Control Engineering. Her research interests include visible light communication, wireless communications, and network information theory.

Hang Li (S'13–M'16) received the B.E. and M.S. degrees from Beihang University, Beijing, China, in 2008 and 2011, respectively, and the Ph.D. degree from Texas A&M University, College Station, TX, USA, in 2016. He was a Post-Doctoral Research Associate with Texas A&M University, from September 2016 to August 2017; and the University of California-Davis, from September 2017 to March 2018. Since April 2018, he has been a Visiting Research Scholar with the Shenzhen Research Institute of Big Data, Shenzhen, China. His current research interests include wireless networks, stochastic optimization, and applications of machine learning.

Fuhui Zhou received the Ph.D. degree from Xidian University, Xi'an, China, in 2016. He has worked as a Senior Research Fellow at Utah State University. He is currently a Full Professor with the College of Electronic and Information Engineering, Nanjing University of Aeronautics and Astronautics. He has published more than 80 articles, including the IEEE JOURNAL OF SELECTED AREAS IN COMMUNICATIONS, the IEEE TRANSACTIONS ON WIRELESS COMMUNICATIONS, the IEEE WIRELESS COMMUNICATIONS, the IEEE NETWORK, and IEEE GLOBECOM. His research interests include cognitive radio, edge computing, machine learning, NOMA, physical-layer security, and resource allocation. He has served as a Technical Program Committee (TPC) member for many International conferences, such as IEEE GLOBECOM and IEEE ICC. He also serves as the Co-Chair for IEEE ICC 2019 and IEEE Globecom 2019 workshop on Advanced Mobile Edge/Fog Computing for 5G Mobile Networks and Beyond. He serves as an Associate Editor for the IEEE SYSTEMS JOURNAL and IEEE ACCESS and *Physical Communications*.

Authorized licensed use limited to: TU Hamburg-Harburg. Downloaded on November 09,2024 at 13:17:55 UTC from IEEE Xplore. Restrictions apply.

Yuhao Wang was born in Hubei, China, in 1977. He received the Ph.D. degree in space exploration technology from Wuhan University, Wuhan, China, in 2006. He was a Visiting Professor with the Department of Electrical Communication Engineering, University of Calgary, Calgary, AB, Canada, in 2008; also with the China National Mobile Communication Research Laboratory, Southeast University, Nanjing, China, from 2010 to 2011. He is currently a Professor with the Cognition Sensor Network Laboratory, School of Information Engineering, Nanchang University (NCU), Nanchang, China. He is also the Dean of the Information Engineering School and the Artificial Intelligence Industry Institute, NCU, and also the Head of Jiangxi Embedded Systems Engineering Research Center. His current research interests include wideband wireless communication and radar sensing fusion system, channel measurement and modeling, nonlinear signal processing, smart sensor, image and video processing, and machine learning. Since 2016, he has been an IET Fellow.

Shiyin Li received the Ph.D. degree in information and communication engineering from the China University of Mining and Technology, Xuzhou, China, in 2010. Since 2010, he has been a Professor with the School of Information and Control Engineering, China University of Mining and Technology. He is currently the Head of the Department of Information Engineering. His research interests include wireless communication and network congestion control.

Authorized licensed use limited to: TU Hamburg-Harburg. Downloaded on November 09,2024 at 13:17:55 UTC from IEEE Xplore. Restrictions apply.